NOTES:

1. THE MAXIMUM TAPER ADJUSTMENT IS 8° BASED UPON 60" SPACING OF ADJUSTABLE MOUNTING BRACKETS.
2. MAX. FACE WIDTH 90" ±2".

PARTS LIST

ITEM	QTY	PART NO.	BOX NO.	PART DESCRIPTION	LENGTH	UNIT WT.	NET WT.
1	12	FACE-CCHALF	P-FACE-CCHALF	FACE ASSEMBLY CORNER CONNECTION (HALF)		33.15	397.80
2	6	FACE-LC	P-FACE-LC	FACE ASSEMBLY LEG CONNECTION		26.99	161.94
3	6	X-FACE-TW		TUBE WELDMENT		48.02	288.11
4	6	P4126		4-1/2" X 126" SCH. 40 GALVANIZED PIPE	126 in	113.56	681.39
						TOTAL WT. #	1529.23

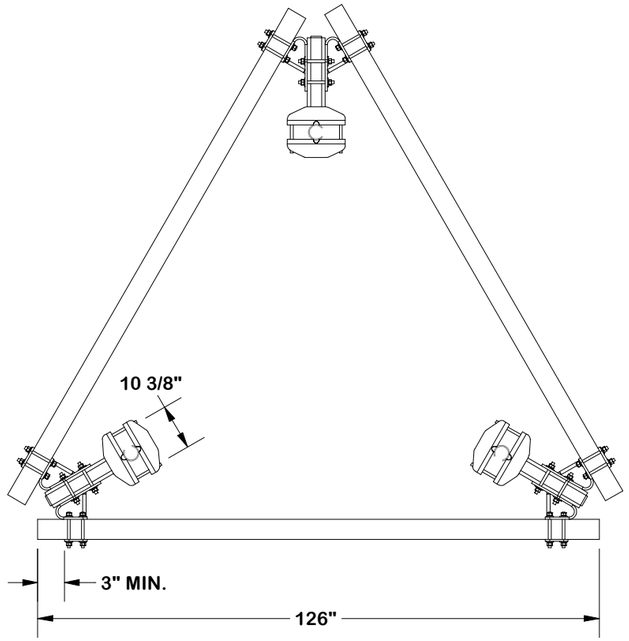

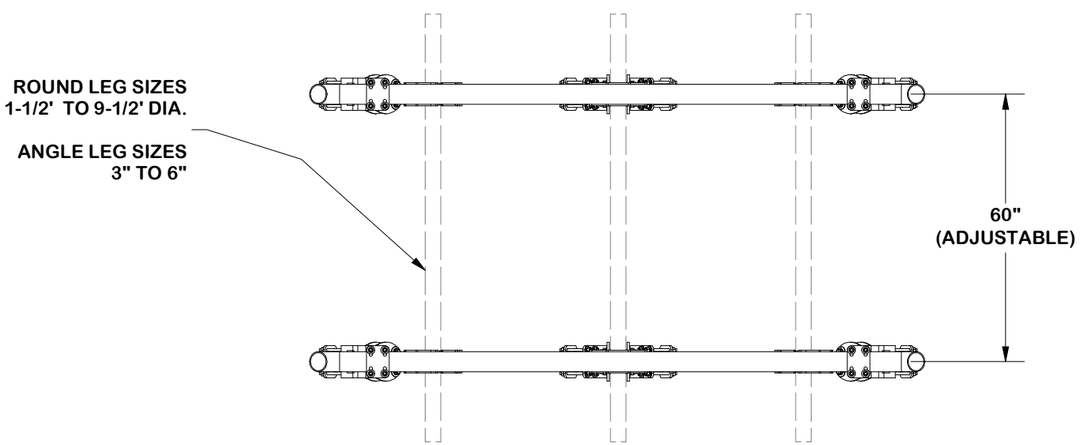

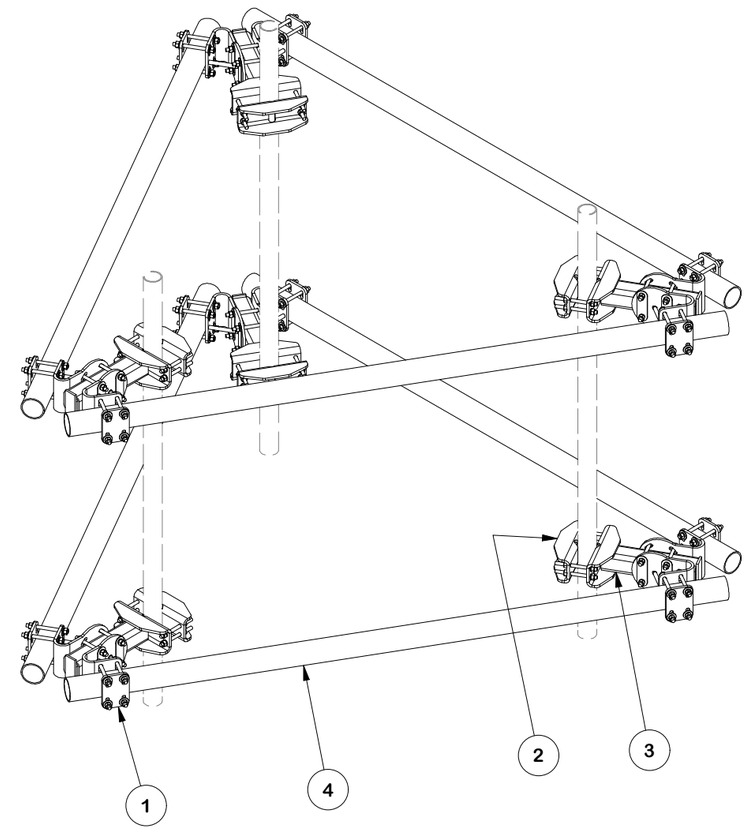

FINISH:
HOT DIP GALVANIZED.

REV	DESCRIPTION OF REVISIONS	CPD	BY	DATE
A	MADE SUPER ASSEMBLY	SP1	ADB	2/16/2026

REVISION HISTORY

TOLERANCE NOTES

TOLERANCES ON DIMENSIONS, UNLESS OTHERWISE NOTED ARE:
SAWED, SHEARED AND GAS CUT EDGES *(± 0.030")*
DRILLED AND GAS CUT HOLES *(± 0.030")* - NO CONING OF HOLES
LASER CUT EDGES AND HOLES *(± 0.010")* - NO CONING OF HOLES
BENDS AND ANGLES ARE ± 1/2 DEGREE
ALL OTHER MACHINING *(± 0.030")*
ALL OTHER ASSEMBLY *(± 0.060")*

PATENT INFORMATION: WWW.SITEPRO1.COM/PATENTS

PROPRIETARY NOTE:
THE DATA AND TECHNIQUES CONTAINED IN THIS DRAWING ARE PROPRIETARY INFORMATION OF VALMONT INDUSTRIES AND CONSIDERED A TRADE SECRET. ANY USE OR DISCLOSURE WITHOUT THE CONSENT OF VALMONT INDUSTRIES IS STRICTLY PROHIBITED.

DESCRIPTION
THREE-SECTOR FACE MOUNT KIT
W/ 4-1/2" OD X 126" PIPES

SITE PRO 1
A valmont COMPANY

Engineering
Support Team:
sp1engineering@valmont.com

CPD NO.	DRAWN BY	ENG. APPROVAL	PART NO.
SP1	ADB 2/16/2026	2/18/2026	FACE-ASY3-4126

CLASS	SUB	DRAWING USAGE	CHECKED BY	DWG. NO.
87	02	CUSTOMER	CSL 2/18/2026	FACE-ASY3-4126

PARTS LIST						
ITEM	QTY	PART NO.	PART DESCRIPTION	LENGTH	UNIT WT.	NET WT.
1	1	X-FACE-TA	TAPER ADJUSTMENT WELDMENT		20.84	20.84
2	1	X-FACE-CP	CONNECTION PLATE	12 in	4.80	4.80
3	2	X-FACE-SB	SPACER BRACKET (WASHER)	6 3/4 in	0.45	0.90
4	6	G58R-8	5/8" x 8" THREADED ROD (HDG.)		0.70	4.18
5	8	G58FW	5/8" HDG USS FLATWASHER	1/8 in	0.07	0.56
6	12	G58LW	5/8" HDG LOCKWASHER		0.03	0.31
7	12	G58NUT	5/8" HDG HEAVY 2H HEX NUT		0.13	1.56
					TOTAL WT. #	33.15

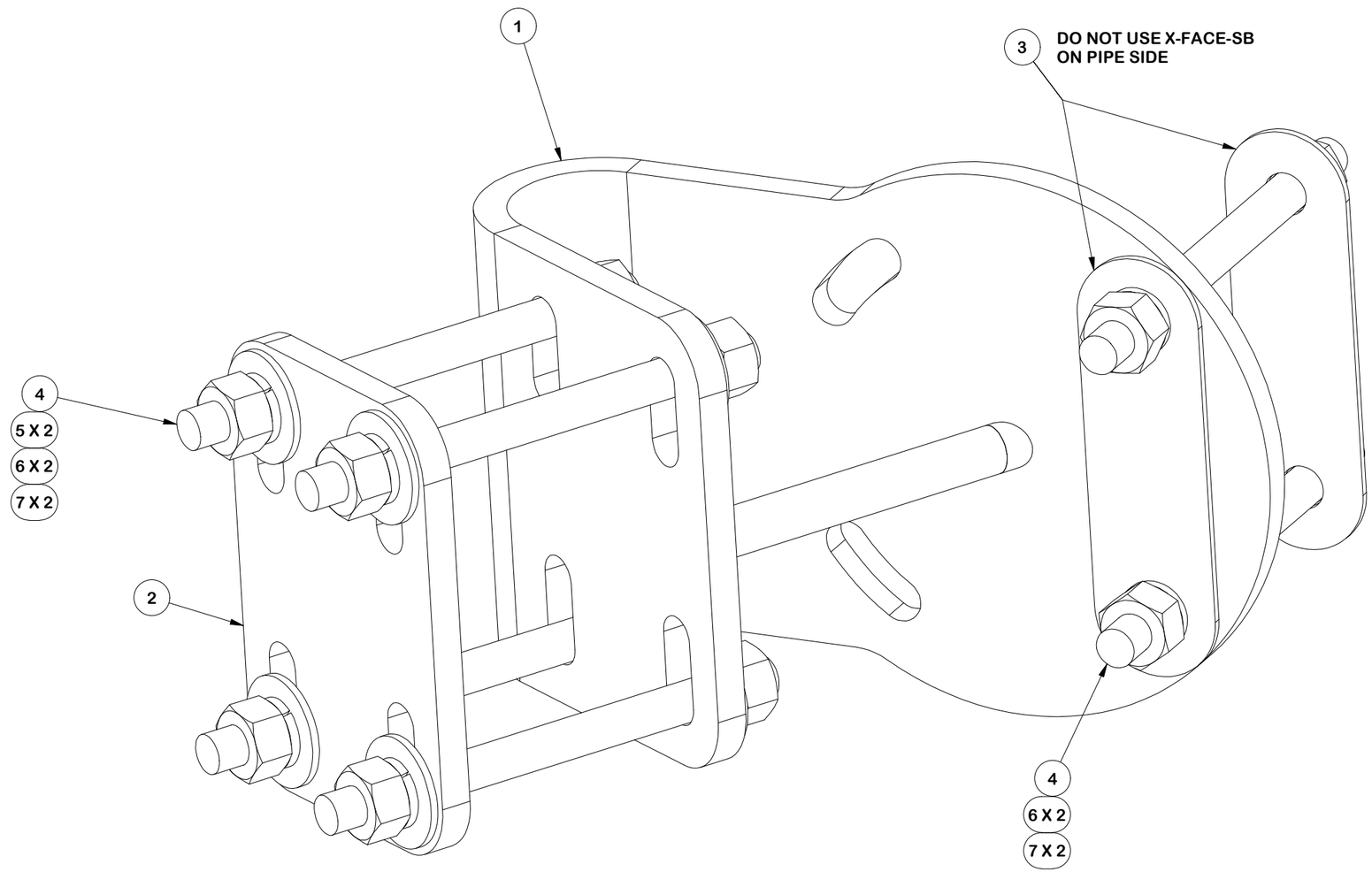

FINISH:
HOT DIP GALVANIZED.

TOLERANCE NOTES

TOLERANCES ON DIMENSIONS, UNLESS OTHERWISE NOTED ARE:
SAWED, SHEARED AND GAS CUT EDGES *(± 0.030")*
DRILLED AND GAS CUT HOLES *(± 0.030")* - NO CONING OF HOLES
LASER CUT EDGES AND HOLES *(± 0.010")* - NO CONING OF HOLES
BENDS AND ANGLES ARE ± 1/2 DEGREE
ALL OTHER MACHINING *(± 0.030")*
ALL OTHER ASSEMBLY *(± 0.060")*

PATENT INFORMATION: WWW.SITEPRO1.COM/PATENTS

PROPRIETARY NOTE:
THE DATA AND TECHNIQUES CONTAINED IN THIS DRAWING ARE PROPRIETARY INFORMATION OF VALMONT INDUSTRIES AND CONSIDERED A TRADE SECRET. ANY USE OR DISCLOSURE WITHOUT THE CONSENT OF VALMONT INDUSTRIES IS STRICTLY PROHIBITED.

DESCRIPTION
THREE-SECTOR FACE MOUNT KIT
W/ 4-1/2" OD X 126" PIPES

SITE PRO 1
A valmont COMPANY

Engineering
Support Team:
sp1engineering@valmont.com

CPD NO.	DRAWN BY	ENG. APPROVAL	PART NO.
SP1	ADB 2/16/2026	2/18/2026	FACE-CCHALF

CLASS	SUB	DRAWING USAGE	CHECKED BY	DWG. NO.
87	02	CUSTOMER	CSL 2/18/2026	FACE-ASY3-4126

PARTS LIST						
ITEM	QTY	PART NO.	PART DESCRIPTION	LENGTH	UNIT WT.	NET WT.
1	1	X-FACE-BP	BENT PLATE FOR X-HDCAMTBW	13 in	18.08	18.08
2	4	G58R-14	5/8" x 14" THREADED ROD (HDG.)		1.22	4.88
3	4	G58R-8	5/8" x 8" THREADED ROD (HDG.)		0.70	2.79
4	8	G58LW	5/8" HDG LOCKWASHER		0.03	0.21
5	8	G58NUT	5/8" HDG HEAVY 2H HEX NUT		0.13	1.04
					TOTAL WT. #	26.99

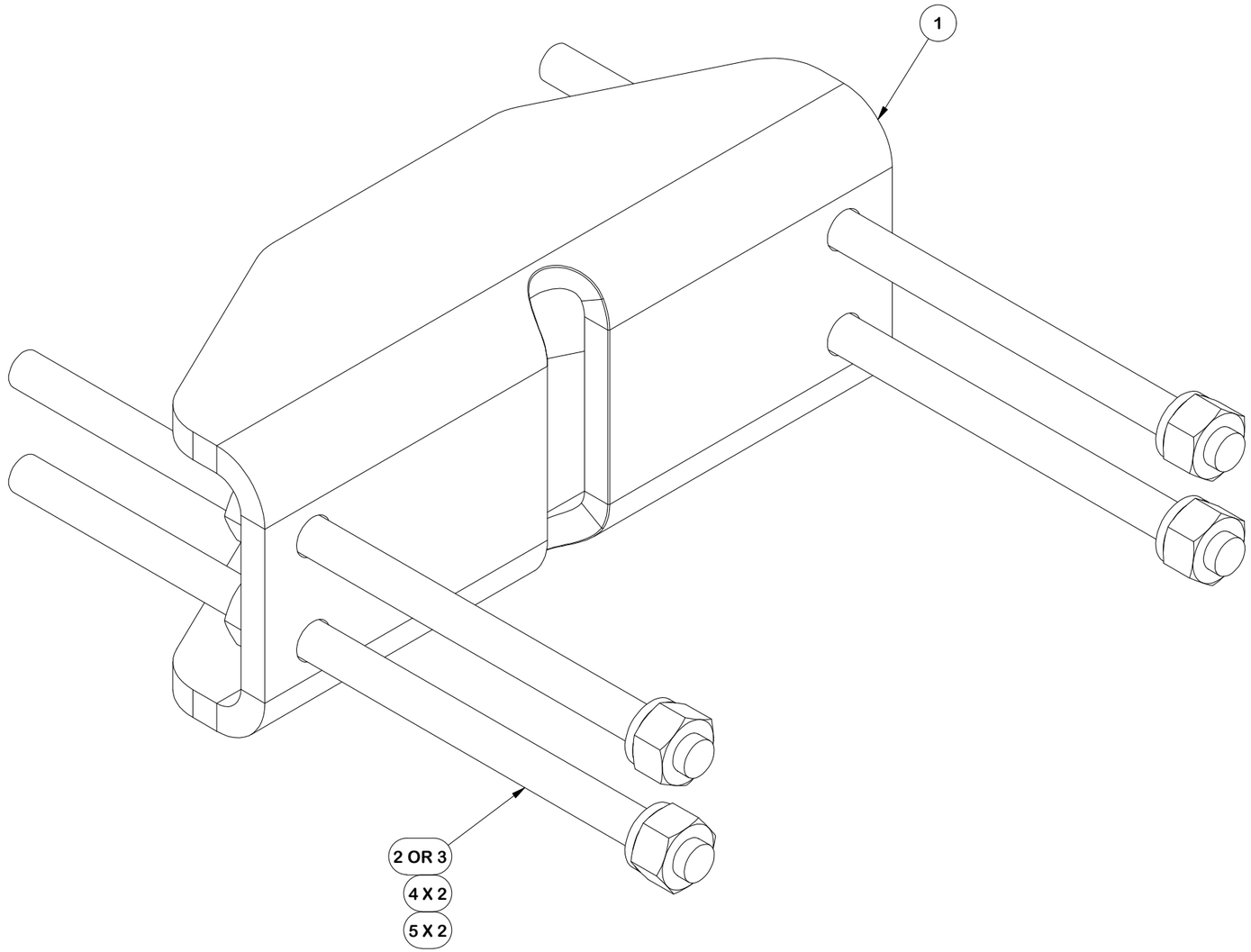

FINISH:
HOT DIP GALVANIZED.

TOLERANCE NOTES

TOLERANCES ON DIMENSIONS, UNLESS OTHERWISE NOTED ARE:
SAWED, SHEARED AND GAS CUT EDGES *(± 0.030")*
DRILLED AND GAS CUT HOLES *(± 0.030")* - NO CONING OF HOLES
LASER CUT EDGES AND HOLES *(± 0.010")* - NO CONING OF HOLES
BENDS AND ANGLES ARE ± 1/2 DEGREE
ALL OTHER MACHINING *(± 0.030")*
ALL OTHER ASSEMBLY *(± 0.060")*

PATENT INFORMATION: WWW.SITEPRO1.COM/PATENTS

PROPRIETARY NOTE:
THE DATA AND TECHNIQUES CONTAINED IN THIS DRAWING ARE PROPRIETARY INFORMATION OF VALMONT INDUSTRIES AND CONSIDERED A TRADE SECRET. ANY USE OR DISCLOSURE WITHOUT THE CONSENT OF VALMONT INDUSTRIES IS STRICTLY PROHIBITED.

DESCRIPTION
THREE-SECTOR FACE MOUNT KIT
W/ 4-1/2" OD X 126" PIPES

CPD NO.	DRAWN BY	ENG. APPROVAL	PART NO.
SP1	ADB 2/16/2026	2/18/2026	FACE-LC

CLASS	SUB	DRAWING USAGE	CHECKED BY	DWG. NO.
87	02	CUSTOMER	CSL 2/18/2026	FACE-ASY3-4126

SITE PRO 1
A valmont COMPANY
Engineering
Support Team:
sp1engineering@valmont.com