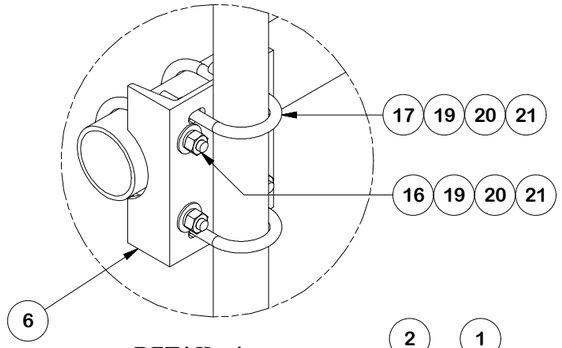

DETAIL A

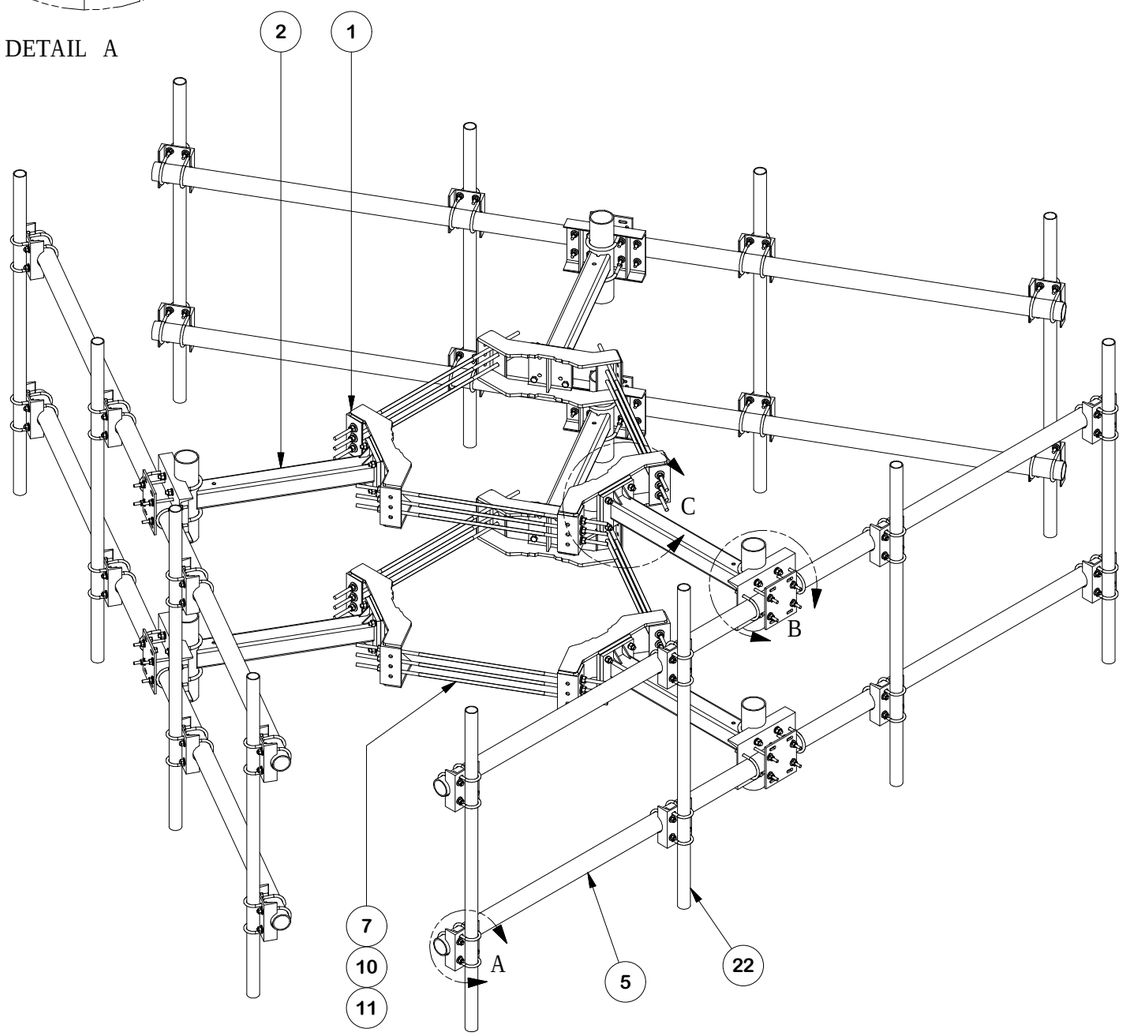

PARTS LIST						
ITEM	QTY	PART NO.	PART DESCRIPTION	LENGTH	UNIT WT.	NET WT.
1	6	X-LWRM	RING MOUNT WELDMENT		68.81	412.85
2	6	X-SV197-36	SUPPORT ARM WELDMENT - 36"		67.93	407.60
3	6	X-SP216	LARGE SUPPORT CROSS PLATE		22.08	132.46
4	6	SCX3	CROSSOVER PLATE	9.250 in	7.19	43.13
5	6	P3174	3-1/2" X 174" SCH 40 GALVANIZED PIPE	174.000 in	109.97	659.80
6	24	X-SP219	SMALL SUPPORT CROSS PLATE	8.250 in	8.61	206.66
7	18	G58R-24	5/8" x 24" THREADED ROD (HDG.)		2.09	37.63
7	18	G58R-48	5/8" X 48" GALV THREADED ROD		4.39	79.03
8	12	X-UB5458	5/8" X 4-5/8" X 7" X 3" U-BOLT (HDG.)		1.54	18.42
9	36	G58FW	5/8" HDG USS FLATWASHER	.122	0.07	2.54
10	84	G58LW	5/8" HDG LOCKWASHER		0.03	2.19
11	36	G58NUT	5/8" HDG HEAVY 2H HEX NUT		0.13	4.68
12	24	A58234	5/8" x 2-3/4" HDG A325 HEX BOLT	2.75	0.36	8.54
13	24	A58FW	5/8" HDG A325 FLATWASHER		0.03	0.82
14	48	A58NUT	5/8" HDG A325 HEX NUT		0.13	6.23
15	12	X-UB1358	1/2" X 3-5/8" X 5-1/2" X 3" U-BOLT (HDG.)		0.77	9.27
16	48	X-UB1306	1/2" X 3-5/8" X 6" X 3" U-BOLT (HDG.)		0.83	39.75
17	48	X-UB1212	1/2" X 2-1/2" X 4-1/2" X 2" U-BOLT (HDG.)		0.63	30.01
18	24	G12R-8	1/2" x 8" THREADED ROD (HDG.)		0.45	10.71
19	276	G12FW	1/2" HDG USS FLATWASHER	0.095	0.03	9.41
20	276	G12LW	1/2" HDG LOCKWASHER	.125	0.01	3.84
21	276	G12NUT	1/2" HDG HEAVY 2H HEX NUT		0.07	19.77
22	12	A	B	C	D	TABLE

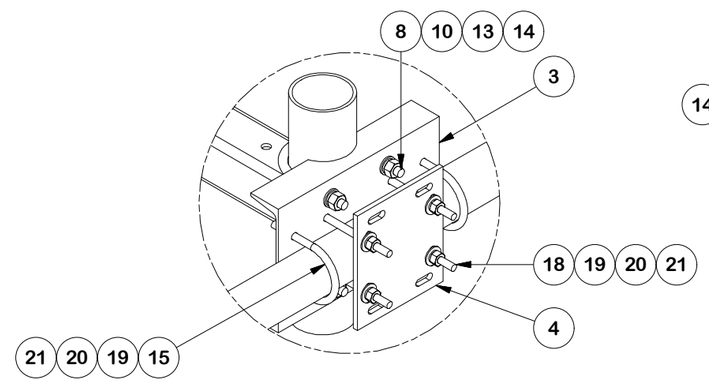

DETAIL B

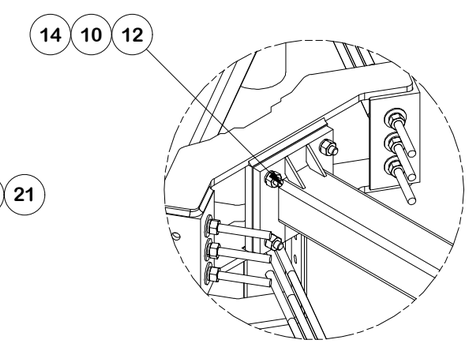

DETAIL C

TABLE					
"ASSEMBLY NO."	PART NO. "A"	PART DESCRIPTION "B"	LENGTH "C"	UNIT WT. "D"	TOTAL WT.
RMVD14-4-272	P272	2-3/8" O.D. SCH. 40 PIPE	72"	21.92	2,422.15
RMVD14-4-284	P284	2-3/8" O.D. SCH. 40 PIPE	84"	25.57	2,468.29
RMVD14-4-296	P296	2-3/8" O.D. SCH. 40 PIPE	96"	29.22	2,536.57
RMVD14-4-2120	P2120	2-3/8" O.D. SCH. 40 PIPE	120"	36.53	2,611.08

TOLERANCE NOTES

TOLERANCES ON DIMENSIONS, UNLESS OTHERWISE NOTED ARE:
SAWED, SHEARED AND GAS CUT EDGES (± 0.030")
DRILLED AND GAS CUT HOLES (± 0.030") - NO CONING OF HOLES
LASER CUT EDGES AND HOLES (± 0.010") - NO CONING OF HOLES
BENDS ARE ± 1/2 DEGREE
ALL OTHER MACHINING (± 0.030")
ALL OTHER ASSEMBLY (± 0.060")

PROPRIETARY NOTE:
THE DATA AND TECHNIQUES CONTAINED IN THIS DRAWING ARE PROPRIETARY INFORMATION OF VALMONT INDUSTRIES AND CONSIDERED A TRADE SECRET. ANY USE OR DISCLOSURE WITHOUT THE CONSENT OF VALMONT INDUSTRIES IS STRICTLY PROHIBITED.

DESCRIPTION
14'-6" DOUBLE MONOPOLE
TRIPLE T-ARM 12"-45"
W/ 2-3/8" ANTENNA PIPES

SITE PRO 1
A valmont COMPANY

Engineering Support Team:
1-888-753-7446

Locations:
New York, NY
Atlanta, GA
Los Angeles, CA
Plymouth, IN
Salem, OR
Dallas, TX

CPD NO.		DRAWN BY	ENG. APPROVAL	PART NO.	PAGE
		CMFL 10/22/2021	11/13/2020	RMVD14-4-2XX	1 OF 2
CLASS	SUB	DRAWING USAGE	CHECKED BY	DWG. NO.	
87	02	CUSTOMER	BMC 11/13/2020	RMVD14-4-2XX	

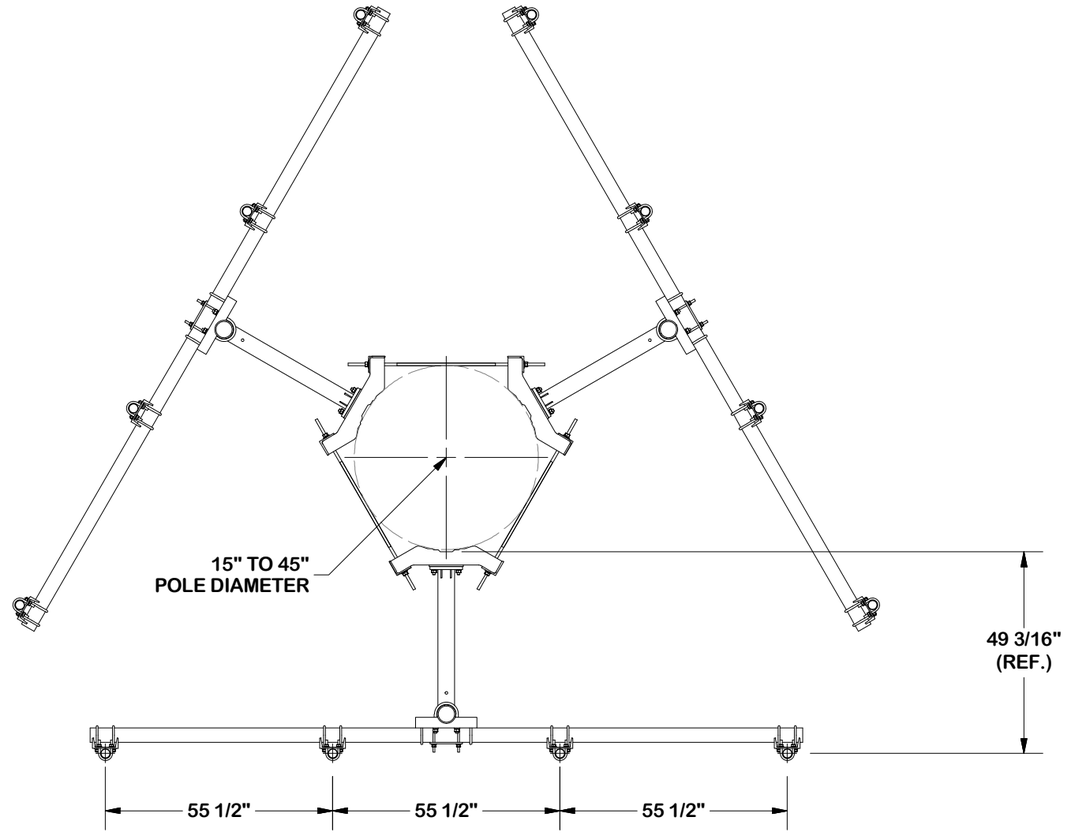

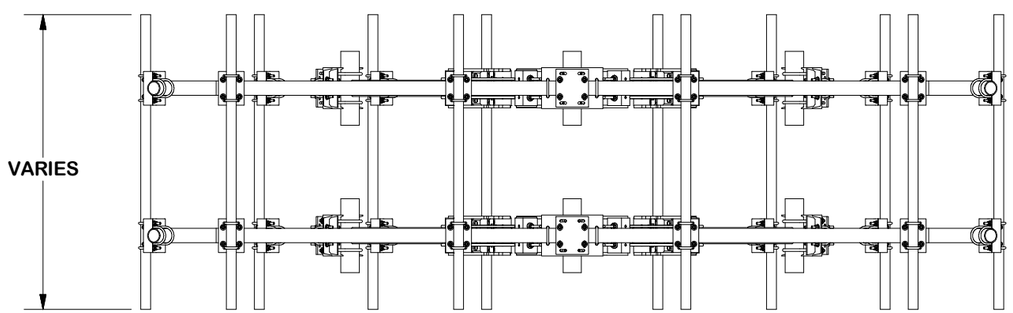

TOLERANCE NOTES

TOLERANCES ON DIMENSIONS, UNLESS OTHERWISE NOTED ARE:
SAWED, SHEARED AND GAS CUT EDGES (± 0.030")
DRILLED AND GAS CUT HOLES (± 0.030") - NO CONING OF HOLES
LASER CUT EDGES AND HOLES (± 0.010") - NO CONING OF HOLES
BENDS ARE ± 1/2 DEGREE
ALL OTHER MACHINING (± 0.030")
ALL OTHER ASSEMBLY (± 0.060")

PROPRIETARY NOTE:
THE DATA AND TECHNIQUES CONTAINED IN THIS DRAWING ARE PROPRIETARY INFORMATION OF VALMONT INDUSTRIES AND CONSIDERED A TRADE SECRET. ANY USE OR DISCLOSURE WITHOUT THE CONSENT OF VALMONT INDUSTRIES IS STRICTLY PROHIBITED.

DESCRIPTION
14'-6" DOUBLE MONOPOLE
TRIPLE T-ARM 12"-45"
W/ 2-3/8" ANTENNA PIPES

CPD NO.		DRAWN BY	ENG. APPROVAL	PART NO.
		CMFL 10/22/2021	11/13/2020	RMVD14-4-2XX
CLASS	SUB	DRAWING USAGE	CHECKED BY	DWG. NO.
87	02	CUSTOMER	BMC 11/13/2020	RMVD14-4-2XX

SITE PRO 1
A valmont COMPANY
Engineering Support Team:
1-888-753-7446
Locations:
New York, NY
Atlanta, GA
Los Angeles, CA
Plymouth, IN
Salem, OR
Dallas, TX