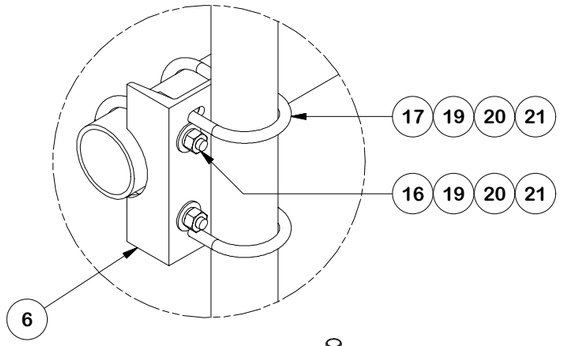


DETAIL A

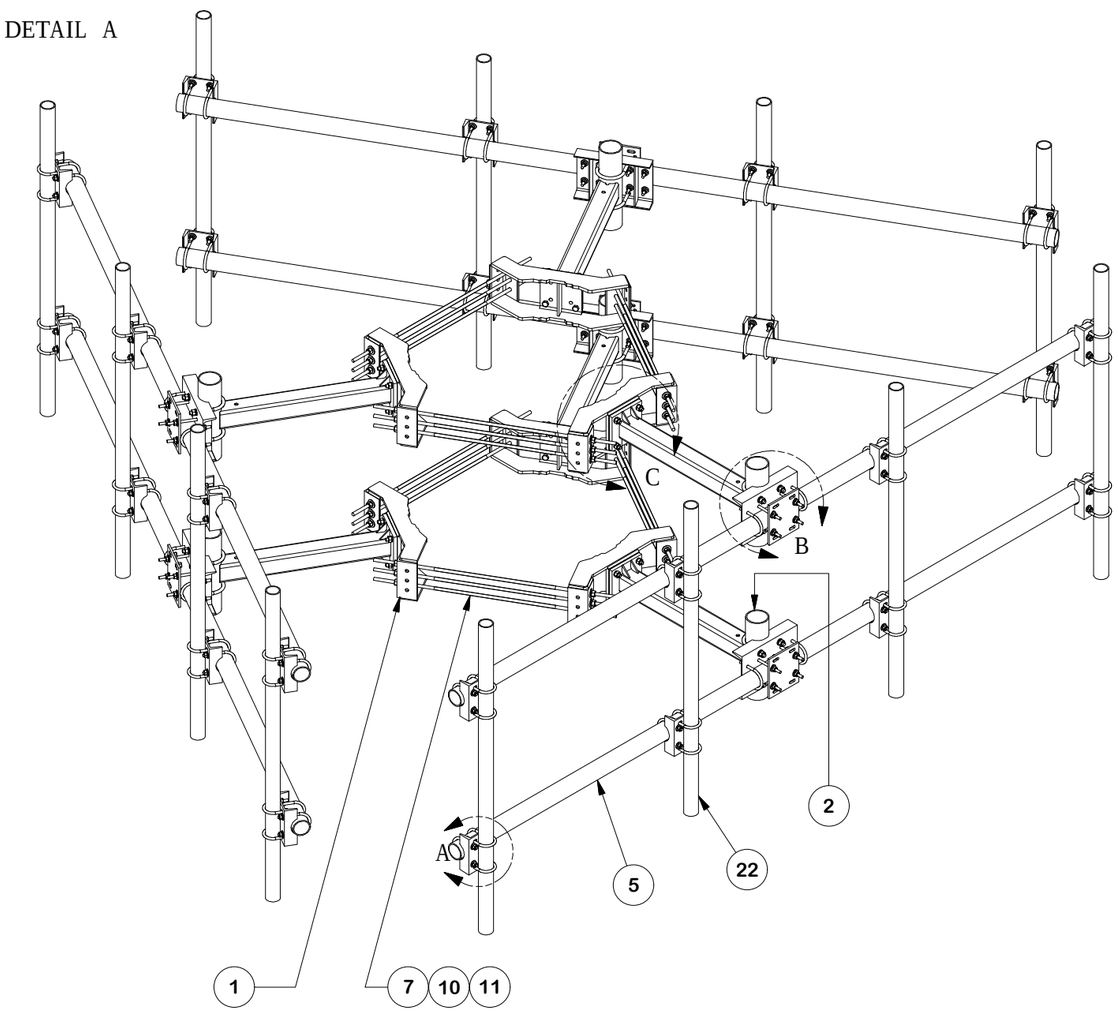


| PARTS LIST | | | | | | |
|---|---|---|---|---|---|---|
| ITEM | QTY | PART NO. | PART DESCRIPTION | LENGTH | UNIT WT. | NET WT. |
| 1 | 6 | X-LWRM | RING MOUNT WELDMENT | | 68.81 | 412.85 |
| 2 | 6 | X-SV197-36 | SUPPORT ARM WELDMENT - 36" | | 67.93 | 407.60 |
| 3 | 6 | X-SP216 | LARGE SUPPORT CROSS PLATE | | 22.08 | 132.46 |
| 4 | 6 | SCX3 | CROSSOVER PLATE | 9.250 in | 7.19 | 43.13 |
| 5 | 6 | P3174 | 3-1/2" X 174" SCH 40 GALVANIZED PIPE | 174.000 in | 109.97 | 659.80 |
| 6 | 24 | X-SP219 | SMALL SUPPORT CROSS PLATE | 8.250 in | 8.61 | 206.66 |
| 7 | 18 | G58R-24 | 5/8" x 24" THREADED ROD (HDG.) | | 2.09 | 37.63 |
| 7 | 18 | G58R-48 | 5/8" X 48" GALV THREADED ROD | | 4.39 | 79.03 |
| 8 | 12 | X-UB5458 | 5/8" X 4-5/8" X 7" X 3" U-BOLT (HDG.) | | 1.54 | 18.42 |
| 9 | 36 | G58FW | 5/8" HDG USS FLATWASHER | .122 | 0.07 | 2.54 |
| 10 | 84 | G58LW | 5/8" HDG LOCKWASHER | | 0.03 | 2.19 |
| 11 | 36 | G58NUT | 5/8" HDG HEAVY 2H HEX NUT | | 0.13 | 4.68 |
| 12 | 24 | A58234 | 5/8" x 2-3/4" HDG A325 HEX BOLT | 2.75 | 0.36 | 8.54 |
| 13 | 24 | A58FW | 5/8" HDG A325 FLATWASHER | | 0.03 | 0.82 |
| 14 | 48 | A58NUT | 5/8" HDG A325 HEX NUT | | 0.13 | 6.23 |
| 15 | 12 | X-UB1358 | 1/2" X 3-5/8" X 5-1/2" X 3" U-BOLT (HDG.) | | 0.77 | 9.27 |
| 16 | 48 | X-UB1306 | 1/2" X 3-5/8" X 6" X 3" U-BOLT (HDG.) | | 0.83 | 39.75 |
| 17 | 48 | X-UB1300 | 1/2" X 3" X 5" X 2" U-BOLT (HDG.) | | 0.70 | 33.45 |
| 18 | 24 | G12R-8 | 1/2" x 8" THREADED ROD (HDG.) | | 0.45 | 10.71 |
| 19 | 276 | G12FW | 1/2" HDG USS FLATWASHER | 0.095 | 0.03 | 9.41 |
| 20 | 276 | G12LW | 1/2" HDG LOCKWASHER | .125 | 0.01 | 3.84 |
| 21 | 276 | G12NUT | 1/2" HDG HEAVY 2H HEX NUT | | 0.07 | 19.77 |
| 22 | 12 | A | B | C | D | TABLE |

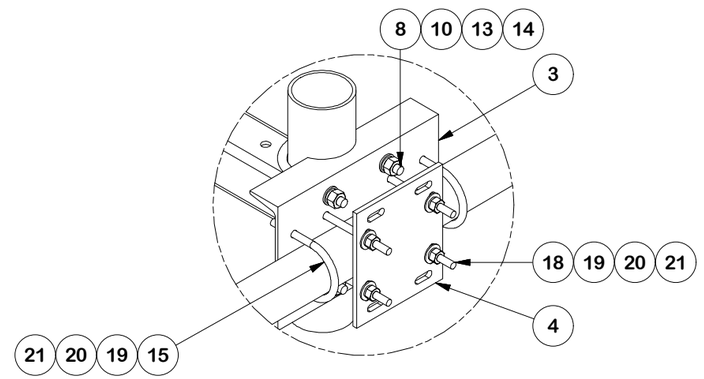


DETAIL B

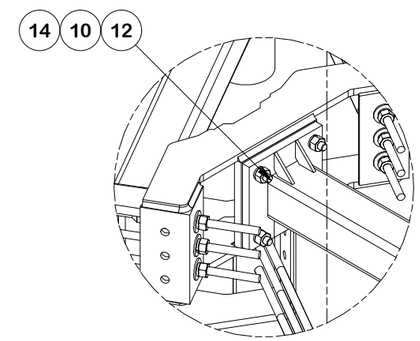


DETAIL C

| TABLE | | | | | |
|---|---|---|---|---|---|
| "ASSEMBLY NO." | PART NO. "A" | PART DESCRIPTION "B" | LENGTH "C" | UNIT WT. "D" | TOTAL WT. |
| RMVD14-4-3072 | P3072 | 2-7/8" O.D. SCH. 40 PIPE | 72" | 34.84 | 2,566.86 |
| RMVD14-4-3084 | P3084 | 2-7/8" O.D. SCH. 40 PIPE | 84" | 40.65 | 2,636.54 |
| RMVD14-4-3096 | P3096 | 2-7/8" O.D. SCH. 40 PIPE | 96" | 46.45 | 2,706.22 |
| RMVD14-4-30120 | P30120 | 2-7/8" O.D. SCH. 40 PIPE | 120" | 80.49 | 2,845.57 |

## TOLERANCE NOTES

TOLERANCES ON DIMENSIONS, UNLESS OTHERWISE NOTED ARE:
SAWED, SHEARED AND GAS CUT EDGES (± 0.030")
DRILLED AND GAS CUT HOLES (± 0.030") - NO CONING OF HOLES
LASER CUT EDGES AND HOLES (± 0.010") - NO CONING OF HOLES
BENDS ARE ± 1/2 DEGREE
ALL OTHER MACHINING (± 0.030")
ALL OTHER ASSEMBLY (± 0.060")

PROPRIETARY NOTE:
THE DATA AND TECHNIQUES CONTAINED IN THIS DRAWING ARE PROPRIETARY INFORMATION OF VALMONT INDUSTRIES AND CONSIDERED A TRADE SECRET. ANY USE OR DISCLOSURE WITHOUT THE CONSENT OF VALMONT INDUSTRIES IS STRICTLY PROHIBITED.

DESCRIPTION
14'-6" DOUBLE MONOPOLE
TRIPLE T-ARM 12"-45"
W/ 2-7/8" ANTENNA PIPES

SITE PRO 1
A valmont COMPANY
Engineering Support Team: 1-888-753-7446
Locations:
New York, NY
Atlanta, GA
Los Angeles, CA
Plymouth, IN
Salem, OR
Dallas, TX

| CPD NO. | DRAWN BY | ENG. APPROVAL | PART NO. |
|---|---|---|---|
| | CMFL 10/22/2021 | 11/13/2020 | RMVD14-4-3XX |

| CLASS | SUB | DRAWING USAGE | CHECKED BY | DWG. NO. |
|---|---|---|---|---|
| 87 | 02 | CUSTOMER | BMC 11/13/2020 | RMVD14-4-3XX |

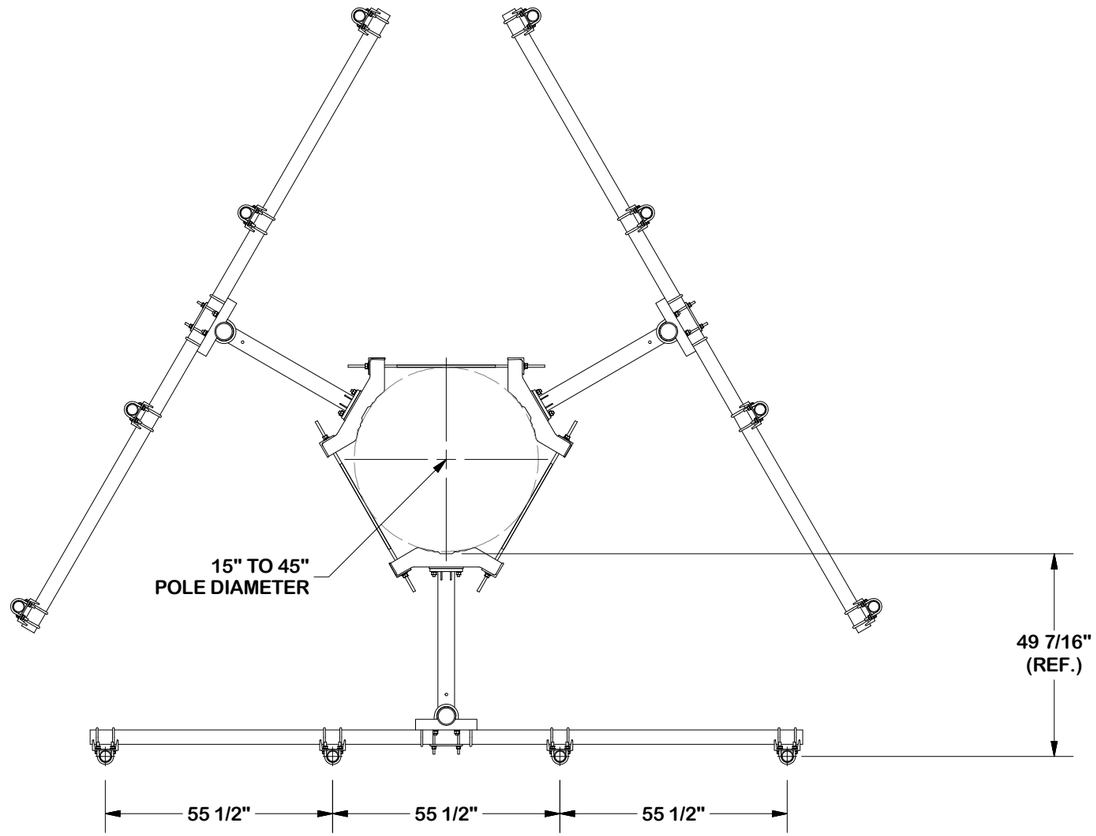


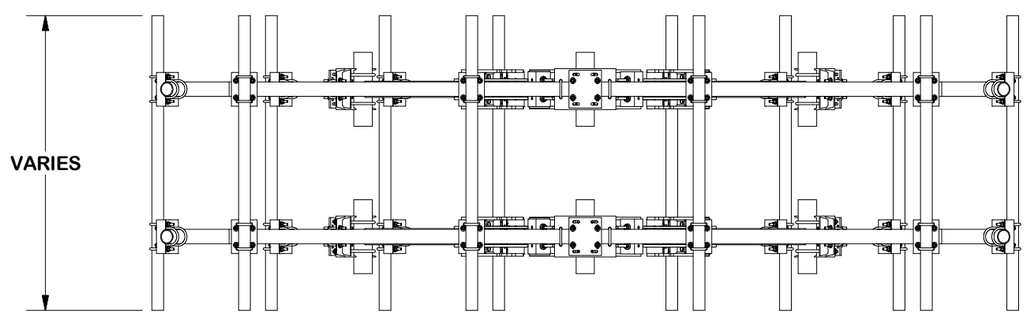


## TOLERANCE NOTES

TOLERANCES ON DIMENSIONS, UNLESS OTHERWISE NOTED ARE:
SAWED, SHEARED AND GAS CUT EDGES (± 0.030")
DRILLED AND GAS CUT HOLES (± 0.030") - NO CONING OF HOLES
LASER CUT EDGES AND HOLES (± 0.010") - NO CONING OF HOLES
BENDS ARE ± 1/2 DEGREE
ALL OTHER MACHINING (± 0.030")
ALL OTHER ASSEMBLY (± 0.060")

PROPRIETARY NOTE:
THE DATA AND TECHNIQUES CONTAINED IN THIS DRAWING ARE PROPRIETARY INFORMATION OF VALMONT INDUSTRIES AND CONSIDERED A TRADE SECRET. ANY USE OR DISCLOSURE WITHOUT THE CONSENT OF VALMONT INDUSTRIES IS STRICTLY PROHIBITED.

DESCRIPTION
14'-6" DOUBLE MONOPOLE
TRIPLE T-ARM 12"-45"
W/ 2-7/8" ANTENNA PIPES

| CPD NO. | | DRAWN BY | ENG. APPROVAL | PART NO. |
|---|---|---|---|---|
| | | CMFL 10/22/2021 | 11/13/2020 | RMVD14-4-3XX |
| CLASS | SUB | DRAWING USAGE | CHECKED BY | DWG. NO. |
| 87 | 02 | CUSTOMER | BMC 11/13/2020 | RMVD14-4-3XX |

SITE PRO 1
A valmont COMPANY
Engineering Support Team:
1-888-753-7446
Locations:
New York, NY
Atlanta, GA
Los Angeles, CA
Plymouth, IN
Salem, OR
Dallas, TX